1550nm / PBS/PBC

PBS/PBC

,

	nm	1550
	nm	±40
	dB	0.3
	dB	0.5
	dB	22
	dB	50
	dB	50
CW	W	5 10 20 30
	KW	10
	-	Ports 1&2:PM1550;Port 3:SMF-28e or PM1550
	m	1
	-	
	N	5
	mm	14x12x8
		-5 +70
		-40 +85

25

0.6dB, 5dB, 2dB, Key

1W

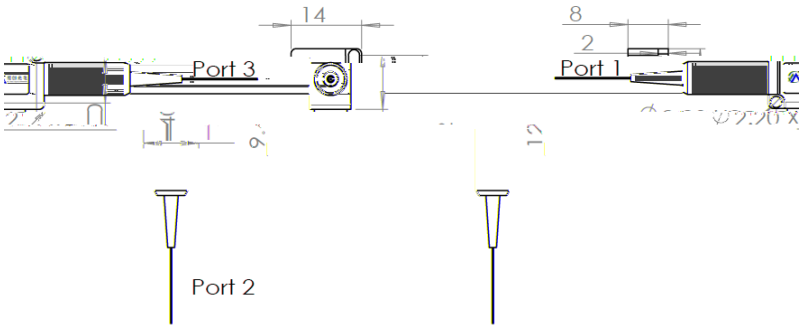

			Port1&2	Port3			
MCHPBS/C	1550-1550nm S-	5-5W 10-10W S-	P15-PM1550	S2-SMF-28e P155-PM1550 45 ° Port 1 P150-PM1550 Port 1	08-0.8m 10-1.0m 15-1.5m S-	B-250um L-900um S-	N-None

MCHPBS-1550-5-P15-P150-10-L-N

1550nm 5W Port1&2 PM1550 Port3 PM1550

Port 1 1 900um