		~
		~

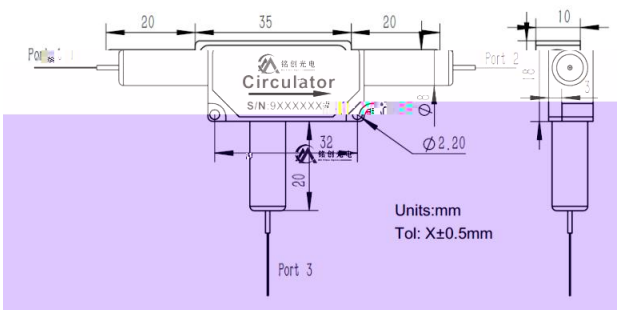
20
35
20
10
Port 1
Port 2
Circulator
S/N:9XXXXXX
32
Ø2.20
20
Units:mm
Tol: X±0.5mm
Port 3

