27mm 56mm

18mm Ø900μm FC/PC FC/APC

@27mm

		MCFPC20	MCFPC21	MCFPC22	MCFPC23	MCFPC24	MCFPC25
	mm	27					
	mm	168(L)X24(W)					
			460-HP	630-HP	780-HP	1060-XP	SMF-28e
	nm	N/A	450-600	600-770	780-970	980-1600	1260-1650
	nm	N/A	488	633	780	1060	1550
	um	N/A	3.5± 0.5um @515nm	4.0± 0.5um @630nm	5.0± 0.5um @850nm	6.2± 0.5um @1060nm	9.7± 0.5

	M	N/A	3				
		N/A	FC/APC				
	dB	N/A	≤ 0.1				

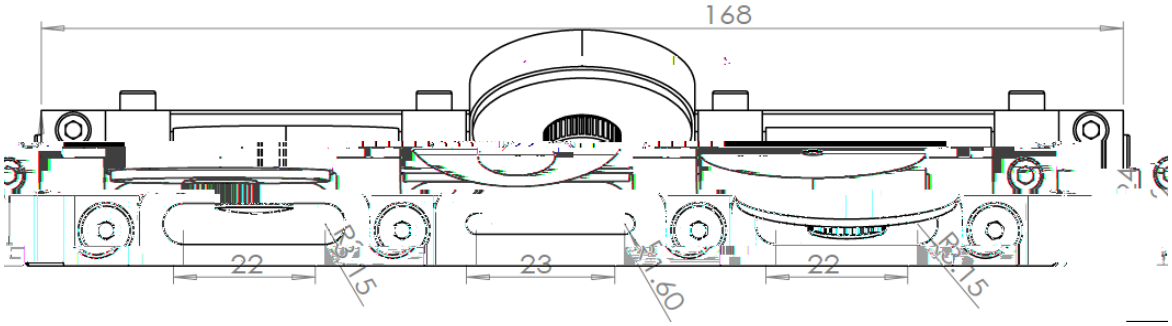

MCFP27-5

27mm SMF-28e, 3 ,900um ,FC/APC